


ARDIC DATASHEET

## MATERİAL & FINISH SPECIFICATIONS

| PRODUCTS TYPE | CODE | STANDART |
|---|---|---|
| Hot Dip Galvanised | HDG | EN ISO 1461 |
| Hot Dip Pregalvanised | PG | EN 10346 |
| Electro Galvanised | EG | TS 149 |
| Stainless Steel 304 Grade | 304 | AISI 304 |
| Stainless Steel 316 Grade | 316 | AISI316 |
| Electrostatic Powder Paint | ESB | RAL CODES |

| PRODUCTS RANGE | HDG | PG | EG | 304 | 316 | ESB |
|---|---|---|---|---|---|---|
| Standart Cable Trays | ok | ok | ok | ok | ok | ok |
| Return Falnged Cable Trays | ok | ok | ok | ok | ok | ok |
| Light Duty Cable Ladders | ok | ok | ok | ok | ok | ok |
| Medium Duty Cable Ladders | ok | ok | ok | ok | ok | ok |
| Heavy Duty Cable Ladders | ok | ok | ok | ok | ok | ok |
| Marine Cable Ladders | ok | ok | ok | ok | ok | ok |
| Marine Cable Ladders | ok | ok | ok | ok | ok | ok |
| Cable Trunkings | ok | ok | ok | ok | ok | ok |
| Underfloor Cable Trunkings | ok | ok | ok | ok | ok | ok |
| C Channels and Profiles | ok | ok | ok | ok | ok | ok |

## Technical Details / Teknik Detaylar



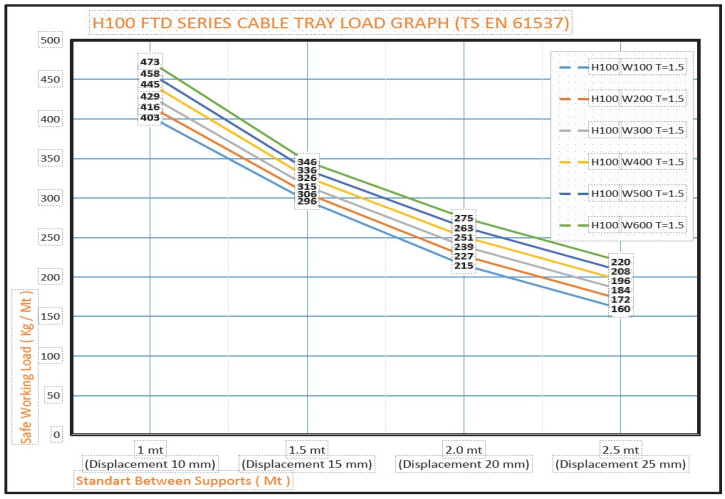


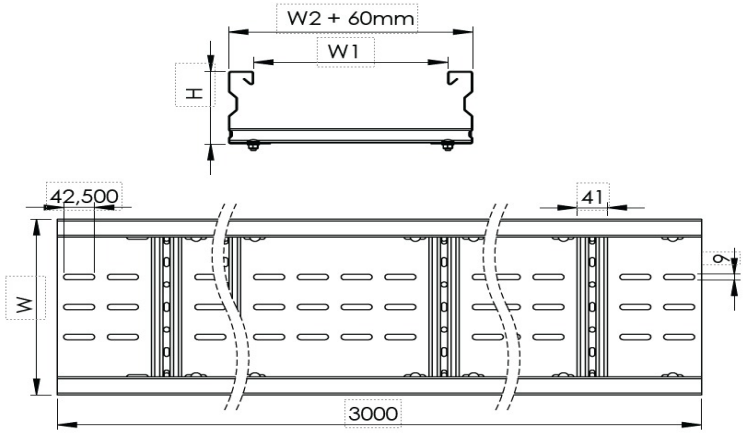


**FTD Cable Tray W600mm H100mm T1,5mm L:3000mm Pre Galvanized**

| DIMENSIONS | | | |
|---|---|---|---|
| Width | Height | Thickness | Coating |
| 600mm | 100mm | 1,5mm | Pre Galvanized |




# CABLE TRAYS - GENERAL INFORMATION

| Recommended Conditions for Stocking & Handling of Cable Trays and Cable Ladder Systems |
|---|
| Avoid stocking and shipping in humid or wet conditions. Dry environment is required for all metal components. Always, however, enable the items have air in-take at all times. |
| Keep all components away from the risk of physical impacts. Preferably all items be kept in original packages, and it is strongly recommended to store on pallets and/or in cardboard boxes. Goods are palletized and shrink wrapped with secure PVC straps in export packaging. |
| System components must not be used as walkway or support unit for people as since such behavior may reduce the performance of the components where as it also may cause personal injury and harm the entire electrical system. |
| All parts must be controlled for any burrs or irregularities that may harm cables, equipments or workers. Protective gloves and caps must be worn during carrying and installing of cable trays or cable ladders. |
| In case that any damage is detected in the system components, immediate precautions must be taken. |
| All cable trays / cable ladders must be connected each other at the ends by straight connectors. |
| Installation of cable tray & cable ladder systems must be performed by qualified personnel. |
| Loading Capacity Graphs must be taken in consideration in electrical projects and installations. |

## ANTI-CORROSION

The corrosive environment of the site must be studied prior to the determination of the material and finish options.
Taking into account below data, the proper selection will lengthen the life of cable tray system and provide safe and economical use.
We suggest pregalvanised finish in dry and indoor conditions; whereas in humid and outdoor conditions hot dip galvanisation must be used.

**CLASSIFICATION OF ENVIRONMENTS**

| **Corrosion category** | **Loss of thickness µm/year** | **Typical environment** | |
|---|---|---|---|
| | | **Outdoor** | **İndoor** |
| C1 inconsiderable | >0,1 | - | Heated buildings (offices, schools, stores etc.) |
| C2 Slight | >0,1 until 0,7 | Little pollution Like rural areas | Not heated buildings with formation of condensate like store houses, coliseums |
| C3 Moderate | >0,7 until 2,1 | City and industrial environments with moderate pollution | Highly humid production plants like laundry, brewery and diary |
| C4 Strong | >2,1 until 4,2 | Industrial areas and coastlines with moderate salt impact | Chemical plants, swimming pools |
| C5-I Very strong (industrial) | >4,2 until 8,2 | Industrial environment with high humidity and aggressive atmosphere | Buildings or areas with almost permanent condensation and pollution |
| C5-M Very strong (marine) | >4,2 until 8,2 | Coastlines and offshore areas with high salt impact | Buildings or areas with almost permanent condensation and pollution |

ARDIC ELEKTRIK SAN. VE TIC. LTD. STI.