

ARDIC DATASHEET

MATERİAL & FINISH SPECIFICATIONS

PRODUCTS TYPE	CODE	STANDART
Hot Dip Galvanised	HDG	EN ISO 1461
Hot Dip Pregalvanised	PG	EN 10346
Electro Galvanised	EG	TS 149
Stainless Steel 304 Grade	304	AISI 304
Stainless Steel 316 Grade	316	AISI316
Electrostatic Powder Paint	ESB	RAL CODES

PRODUCTS RANGE	HDG	PG	EG	304	316	ESB
Standart Cable Trays	ok	ok	ok	ok	ok	ok
Return Falnged Cable Trays	ok	ok	ok	ok	ok	ok
Light Duty Cable Ladders	ok	ok	ok	ok	ok	ok
Medium Duty Cable Ladders	ok	ok	ok	ok	ok	ok
Heavy Duty Cable Ladders	ok	ok	ok	ok	ok	ok
Marine Cable Ladders	ok	ok	ok	ok	ok	ok
Marine Cable Ladders	ok	ok	ok	ok	ok	ok
Cable Trunkings	ok	ok	ok	ok	ok	ok
Underfloor Cable Trunkings	ok	ok	ok	ok	ok	ok
C Channels and Profiles	ok	ok	ok	ok	ok	ok

Technical Details / Teknik Detaylar

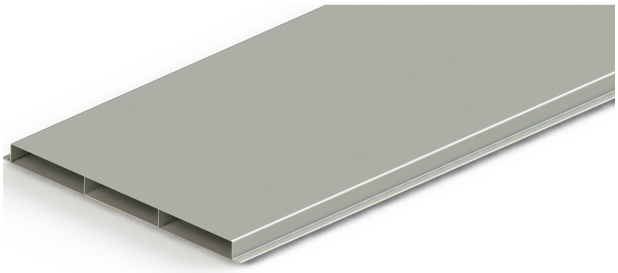

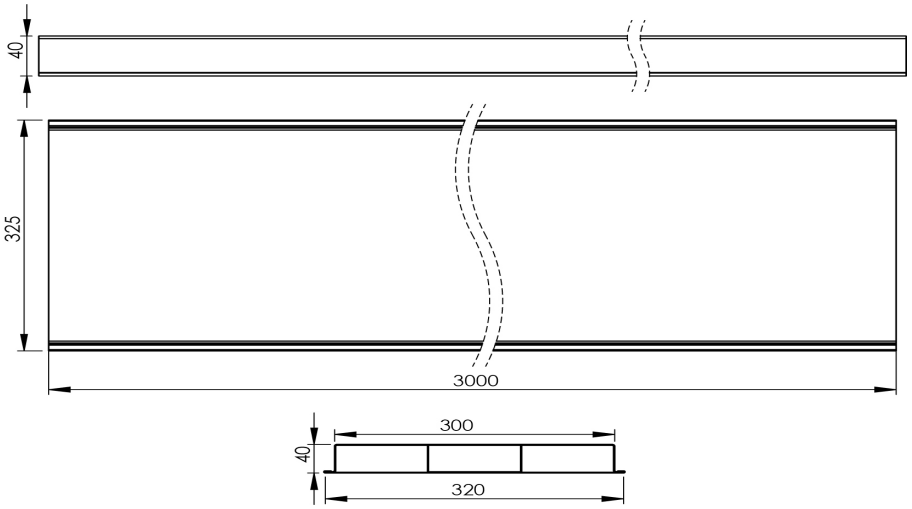

Underfloor Trunking Tray W300mm H40mm T1,2mm L:3000 Pre Galvanized

DIMENSIONS			
Width	Height	Thickness	Coating
300mm	40mm	1,2mm	Pre Galvanized



CABLE TRAYS - GENERAL INFORMATION

Recommended Conditions for Stocking & Handling of Cable Trays and Cable Ladder Systems
Avoid stocking and shipping in humid or wet conditions. Dry environment is required for all metal components. Always, however, enable the items have air in-take at all times.
Keep all components away from the risk of physical impacts. Preferably all items be kept in original packages, and it is strongly recommended to store on pallets and/or in cardboard boxes. Goods are palletized and shrink wrapped with secure PVC straps in export packaging.
System components must not be used as walkway or support unit for people as since such behavior may reduce the performance of the components where as it also may cause personal injury and harm the entire electrical system.
All parts must be controlled for any burrs or irregularities that may harm cables, equipments or workers. Protective gloves and caps must be worn during carrying and installing of cable trays or cable ladders.
In case that any damage is detected in the system components, immediate precautions must be taken.
All cable trays / cable ladders must be connected each other at the ends by straight connectors.
Installation of cable tray & cable ladder systems must be performed by qualified personnel.
Loading Capacity Graphs must be taken in consideration in electrical projects and installations.

ANTI-CORROSION

The corrosive environment of the site must be studied prior to the determination of the material and finish options.
Taking into account below data, the proper selection will lengthen the life of cable tray system and provide safe and economical use.
We suggest pregalvanised finish in dry and indoor conditions; whereas in humid and outdoor conditions hot dip galvanisation must be used.

CLASSIFICATION OF ENVIRONMENTS

Corrosion category	**Loss of thickness µm/year**	**Typical environment**	
		Outdoor	**İndoor**
C1 inconsiderable	>0,1	-	Heated buildings (offices, schools, stores etc.)
C2 Slight	>0,1 until 0,7	Little pollution Like rural areas	Not heated buildings with formation of condensate like store houses, coliseums
C3 Moderate	>0,7 until 2,1	City and industrial environments with moderate pollution	Highly humid production plants like laundry, brewery and diary
C4 Strong	>2,1 until 4,2	Industrial areas and coastlines with moderate salt impact	Chemical plants, swimming pools
C5-I Very strong (industrial)	>4,2 until 8,2	Industrial environment with high humidity and aggressive atmosphere	Buildings or areas with almost permanent condensation and pollution
C5-M Very strong (marine)	>4,2 until 8,2	Coastlines and offshore areas with high salt impact	Buildings or areas with almost permanent condensation and pollution

ARDIC ELEKTRIK SAN. VE TIC. LTD. STI.